ACTIVITY:
MAKE A JAPANESE KAMIKO COAT

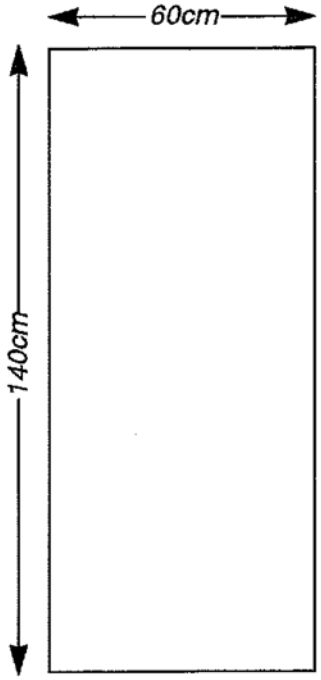

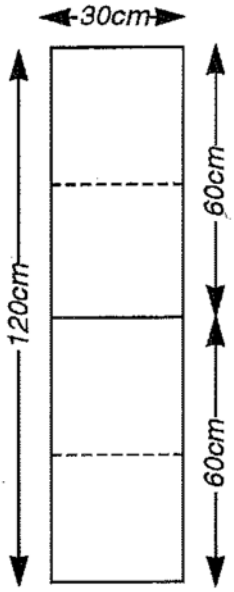

1. For this activity you will need strong brown wrapping paper and brown parcel tape. The paper needs to be crumpled to make it supple and this is easier and more effective if it is slightly damp. Try sponging a sample of the paper before you start to check that it is strong enough to be crumpled damp. For pupils of KS2 size, cut out one paper rectangle measuring 60cm x 140cm for the body of the coat and one measuring 30cm x 120cm for the sleeves. You may have to adapt the measurements for older pupils.

2. Cut the sleeve section in half along the solid line and then fold in half again to make two sleeves each 30cm x 30cm.

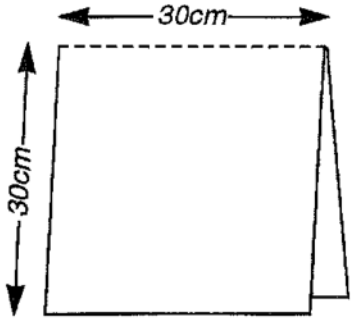

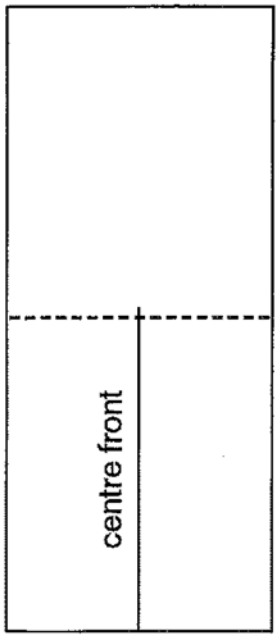

3. Fold the body section in half along the dotted line and using a permanent marker draw a line up the centre front. Continue this line 2cm beyond the fold.

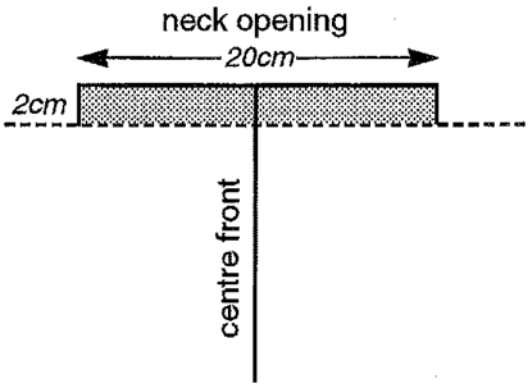

4. Draw a neck opening of 20cm. The shaded part will be cut away after the paper has been crumpled for a better fit around the neck and shoulders.

©. Trustees of the Victoria and Albert Museum 1997. This page may be photocopied for use by schools or other educational institutions

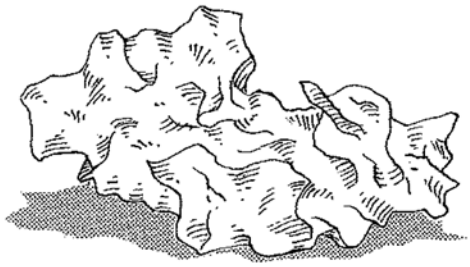

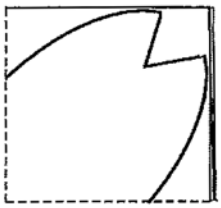

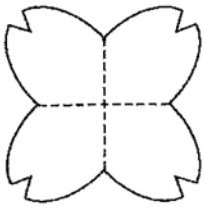

5 Dampen the paper slightly and crumple it between your hands several times. If any tears occur repair them with a patch made by folding a piece of paper into four and cutting out a petal shape.

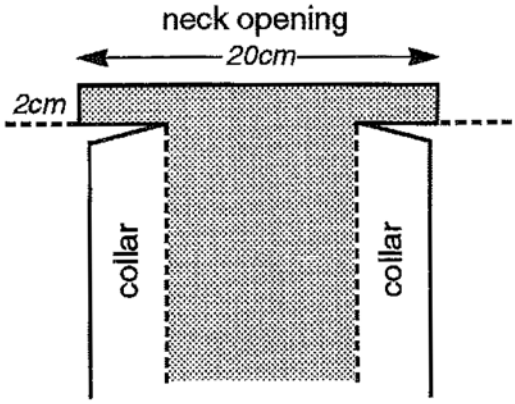

6 When the paper has been crushed and is supple and soft, cut along the centre-fold line and cut away the shaded part at the neck opening. Reinforce this opening with tape. Fold back 5cm at the centre front.

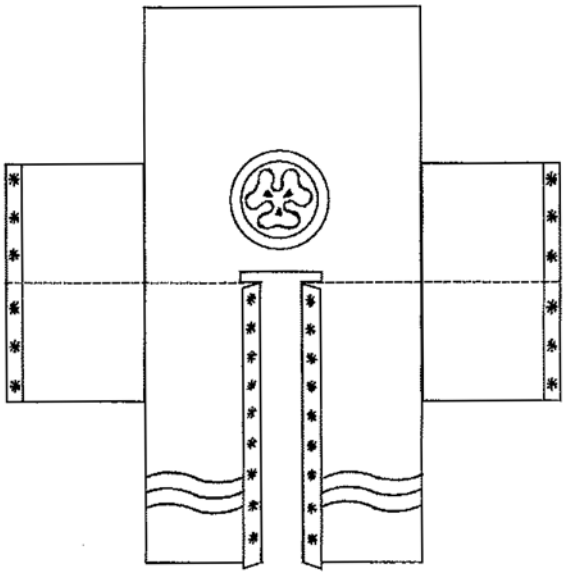

7 Lay the sections flat on the table and while matching the shoulder seams, tape sleeves to the body of the coat. Decorate the coat while it is flat before taping up the side seams and sleeves.

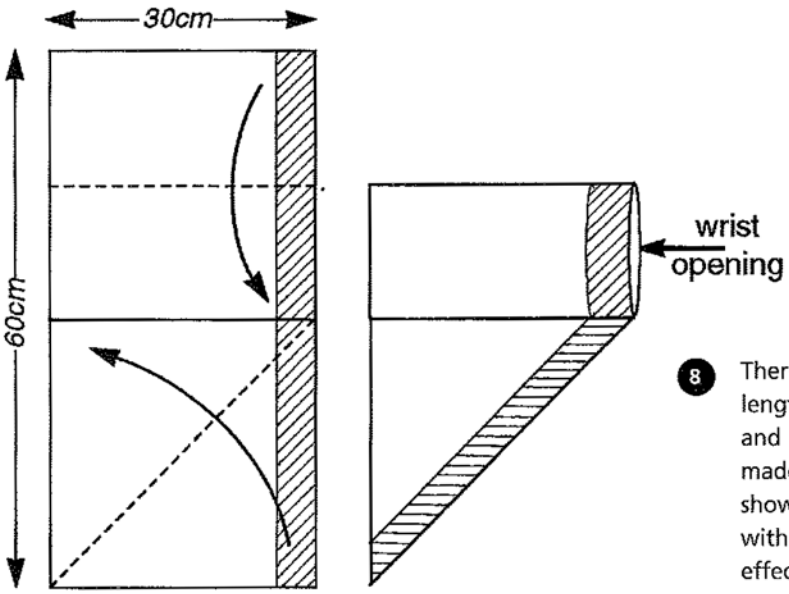

8 There are many variations in sleeve lengths and styles according to regions and uses. An interesting alternative can be made by folding the sleeves diagonally as shown in the diagram. Decorate the edge with a geometric pattern for the best effect on this type of sleeve.

©. Trustees of the Victoria and Albert Museum 1997. This page may be photocopied for use by schools or other educational institutions.